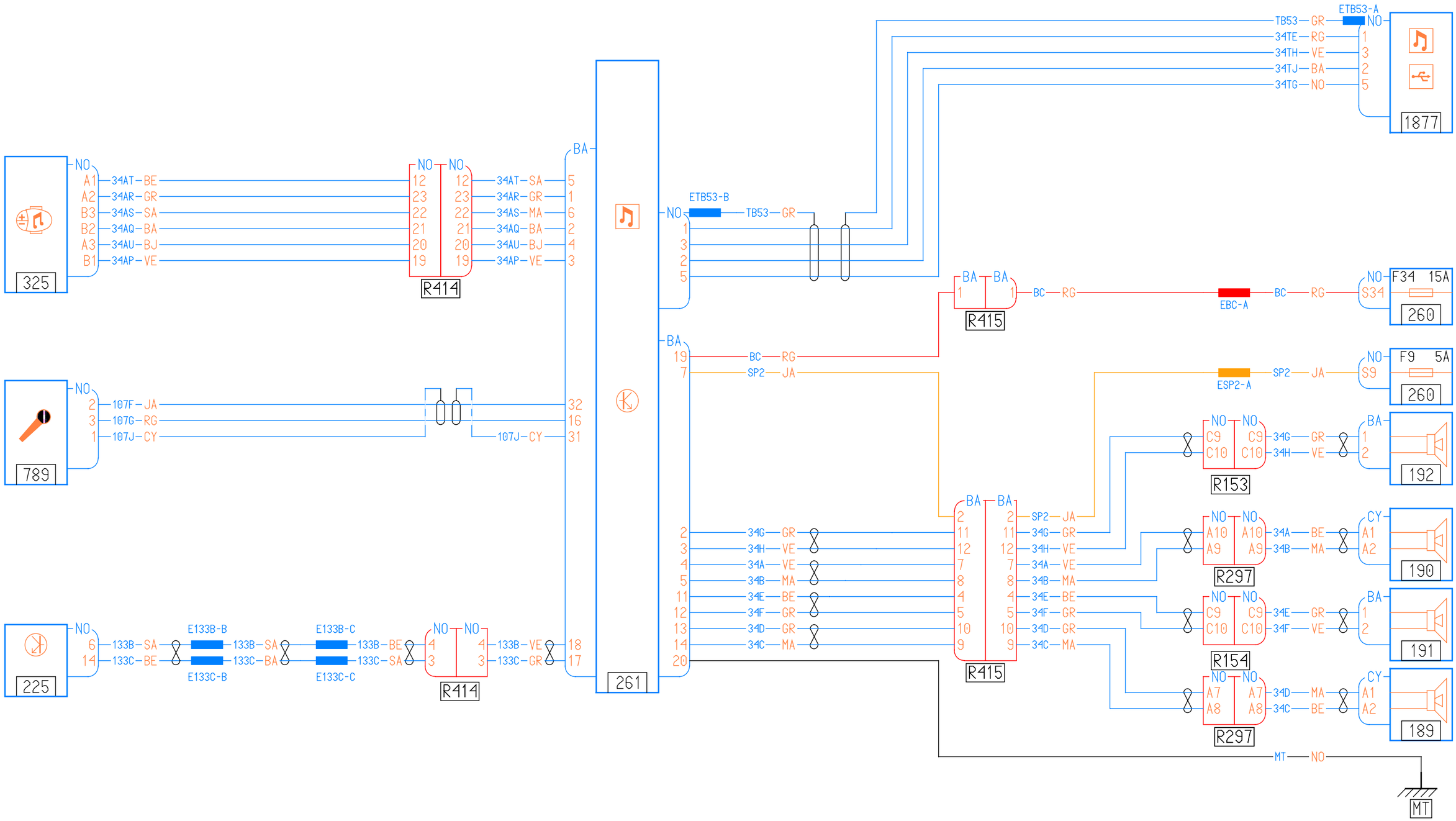
325
NO
A1 34AT-BE
A2 34AR-GR
B3 34AS-SA
B2 34AQ-BA
A3 34AU-BJ
B1 34AP-VE
R414
NO NO
12 12 34AT-SA 5
23 23 34AR-GR 1
22 22 34AS-MA 6
21 21 34AQ-BA 2
20 20 34AU-BJ 4
19 19 34AP-VE 3
BA
789
2 107F-JA
3 107G-RG
1 107J-CY
32
16
107J-CY 31
225
6 133B-SA
14 133C-BE
E133B-B
E133C-B
133B-SA
133C-BA
E133B-C
E133C-C
133B-BE
133C-SA
4 4 133B-VE 18
3 3 133C-GR 17
261
ETB53-B
TB53-GR
1
3
2
5
19 BC-RG
7 SP2-JA
2 34G-GR
3 34H-VE
4 34A-VE
5 34B-MA
11 34E-BE
12 34F-GR
13 34D-GR
14 34C-MA
20
R415
1 1 BC-RG
EBC-A
BC-RG
NO F34 15A
S34
260
ESP2-A
SP2-JA
NO F9 5A
S9
260
R153
C9 C9 34G-GR
C10 C10 34H-VE
192
R297
A10 A10 34A-BE
A9 A9 34B-MA
190
R154
C9 C9 34E-GR
C10 C10 34F-VE
191
R297
A7 A7 34D-MA
A8 A8 34C-BE
189
TB53-GR
34TE-RG
34TH-VE
34TJ-BA
34TG-NO
ETB53-A
1877
MT-NO
MT